Revised Mar/2022

IM-0460-WC/WH

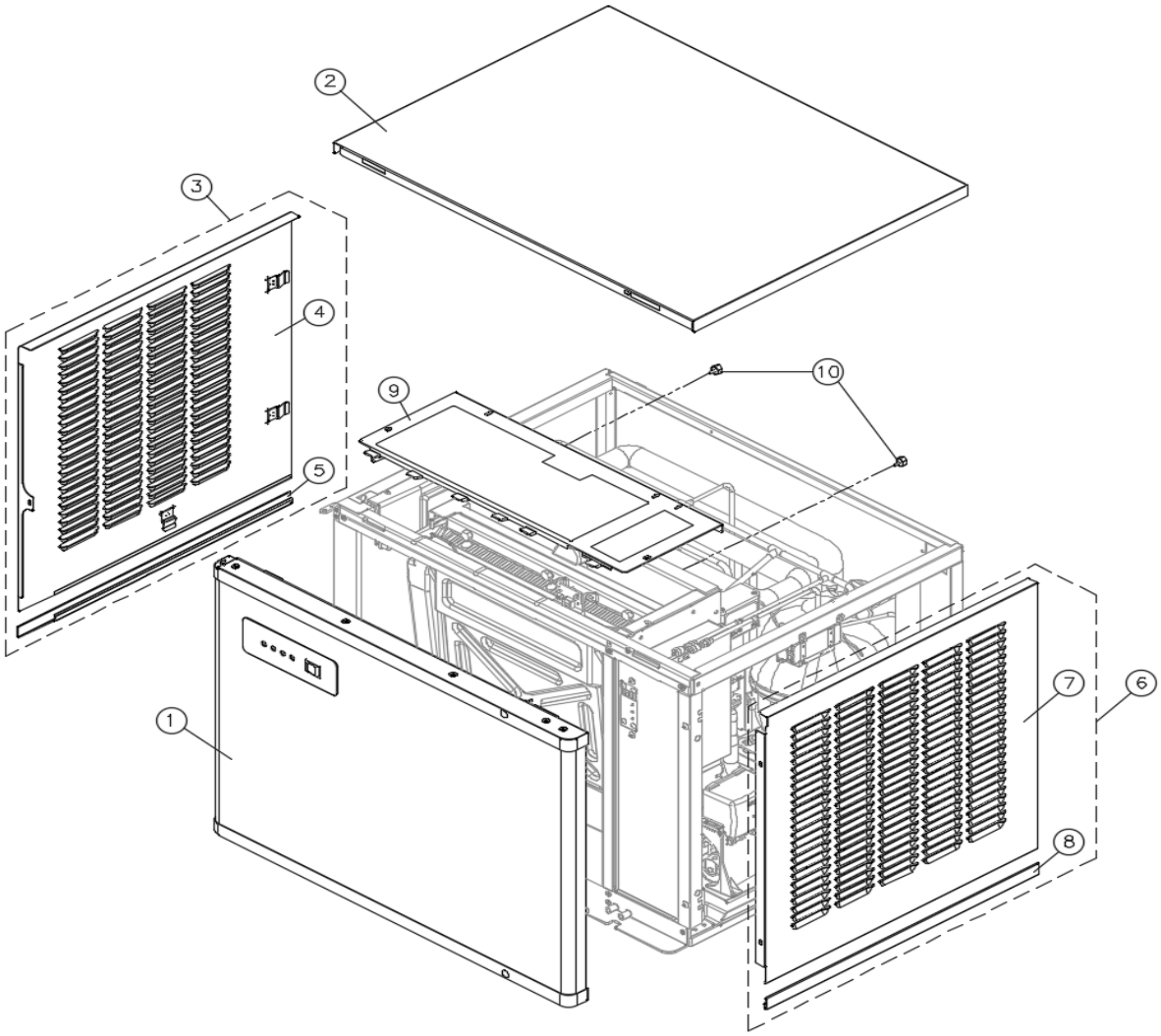

NO	ITEMS	CODE	Q'TY
1	FRONT PANEL	422002430	1
2	TOP COVER	317194410	1
3	LEFT SIDE PANEL	420048100	1
4	LEFT SIDE W-PANEL	349096500	1
5	SIDE PANEL B-ENDCAP(L)	348010200	1
6	RIGHT SIDE PANEL	420048220	1
7	RIGHT SIDE W-PANEL	349096720	1
8	SIDE PANEL B-ENDCAP(R)	348010300	1
9	EVAP TOP COVER, PLASTIC	427059100	1
10	THUMB SCREW	210804501	2

Revised Mar/2022

IM-0460-WC/WH

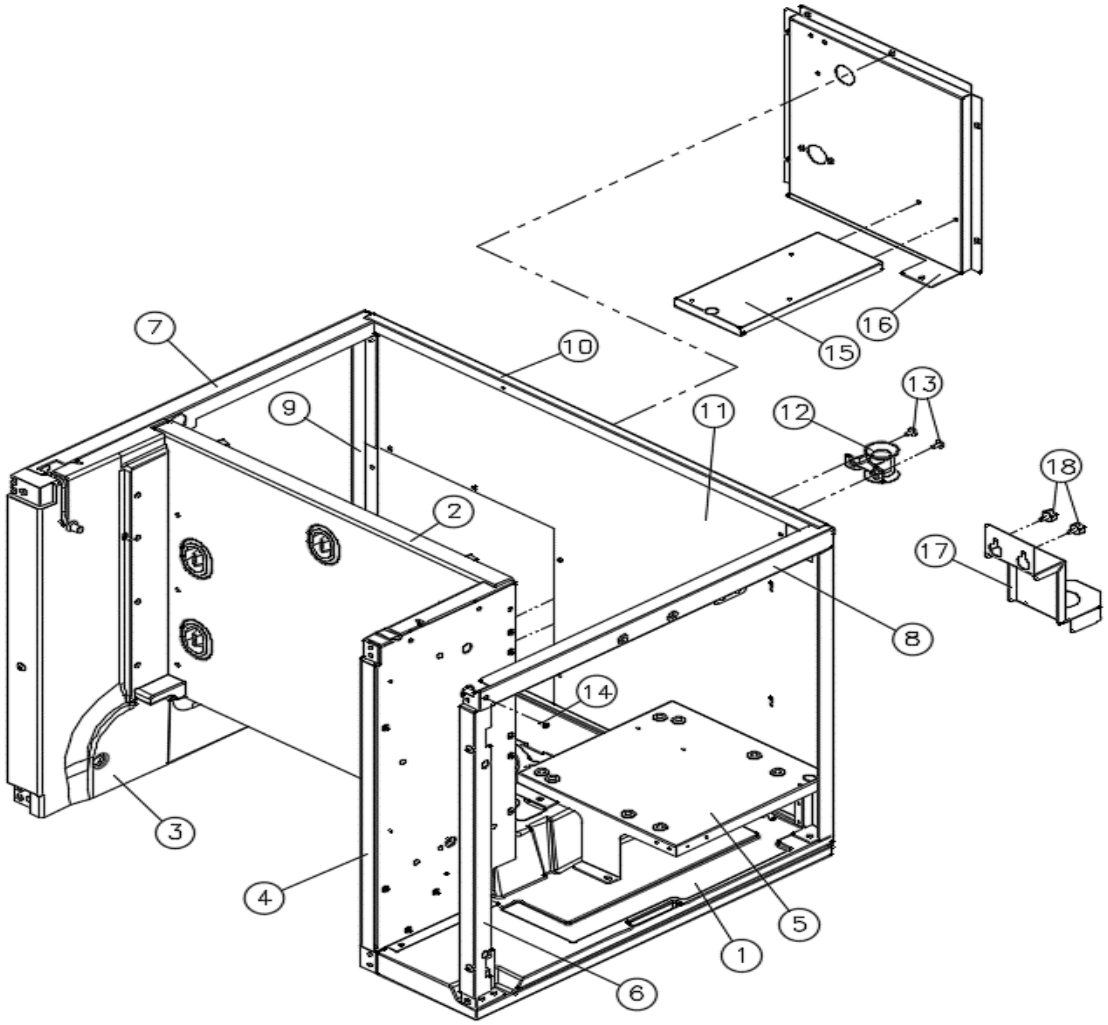

NO	ITEMS	CODE	Q'TY
1	BASE PLATE INSULAION	483022200	1
2	EVAPORATOR BACK PANEL	422002200	1
3	EVAPORATOR SIDE PANEL (L)	420047100	1
4	EVAPORATOR SIDE PANEL (R)	420047200	1
5	SUPPORT, COMPRESSOR	320593600	1
6	FRONT SIDE FRAME (R)	348010510	1
7	SIDE TOP FRAME (L)	348010700	1
8	SIDE TOP FRAME (R)	348011800	1
9	SIDE REAR FRAME(L)	348010600	1
10	REAR TOP FRAME	348010900	1
11	BACK PANEL	349097510	1
12	WATER LEVEL PROBE HOLDER	339014100	1
13	SELF-TAPING SCREW	MTCX0816R	2
14	MACHINE SCREW	MFCX0820R	1
15	SUPPORT, CONDENSER	301179000	1
16	BACK PANEL	349097610	1
17	WATER PUMP HOLDER	301181000	1
18	THUMB SCREW	210804501	2

Revised Mar/2022

IM-0460-WC/WH

[FRONT PANEL PARTS]

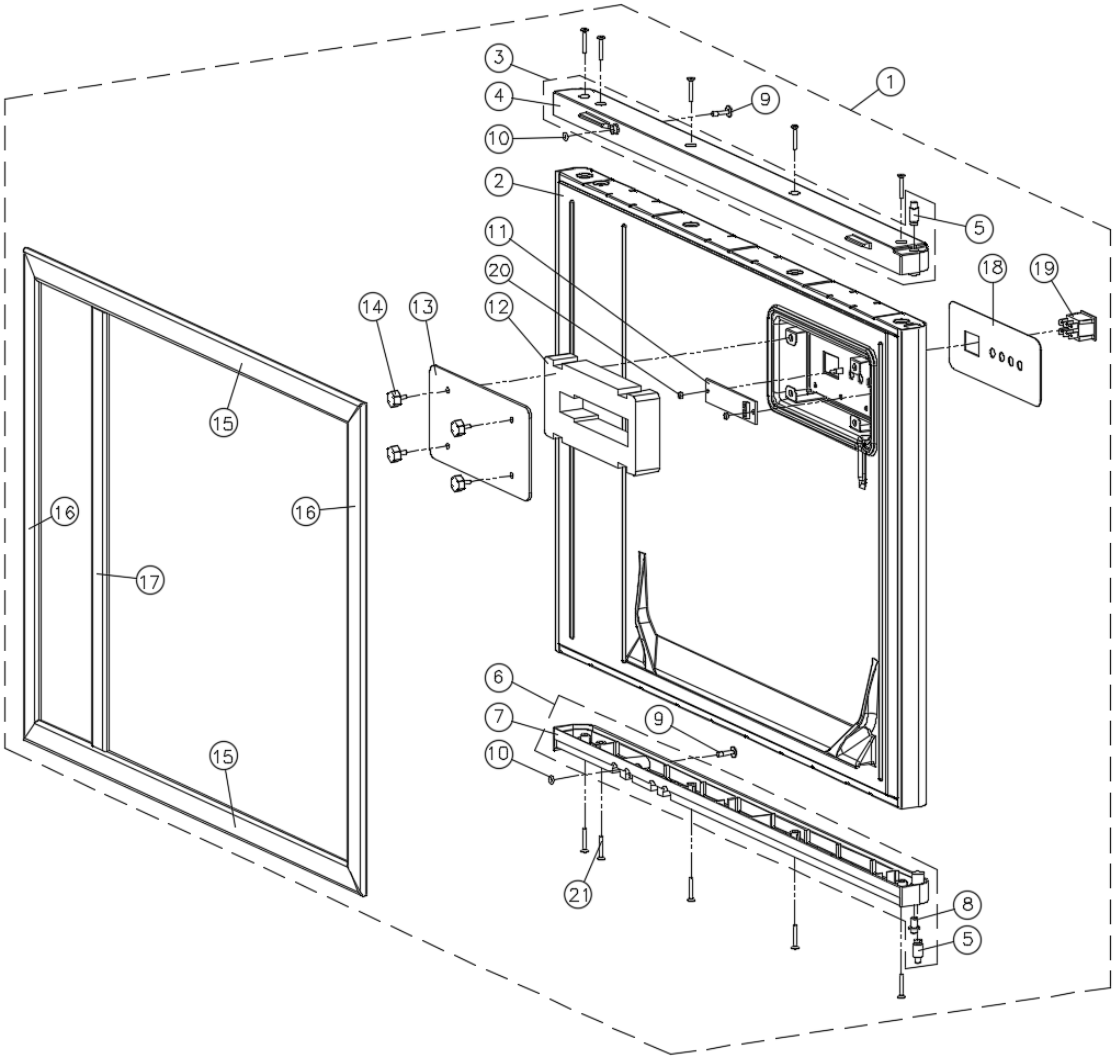

NO	ITEMS	CODE	Q'TY
1	FRONT PANEL COMPLETE ASSY	422002430	1
2	FRONT PANEL FOAM ASSY	422002320	1
3	FRONT TOP CAP COMPLETE ASSY	432034910	1
4	FRONT TOP CAP	341012602	1
5	TOP PIN ASSY	314029900	2
6	FRONT BOTTOM CAP COMPLETE	432035010	1
7	FRONT BOTTOM CAP	341012702	1
8	SHAFT HINGE	321005000	1
9	FRONT COVER SCREW	210818600	2
10	O-RING, SCREW RETAINER	303036600	2
11	DISPLAY PCB	367013000	1
12	INSULATION, DISPLAY	306041901	1
13	COVER, DISPLAY REAR	317197500	1
14	THUMB SCREW	210804501	4
15	FRONT PANEL GASKET(TOP/BOTTOM)	656004500	2
16	FRONT PANEL GASKET (L/R)	656004510	2
17	FRONT PANEL GASKET (DIVIDER)	656004600	1
18	FRONT DISPLAY LABEL	440033800	1
19	ON/OFF/ICE SWITCH	355024500	1
20	NUT HEX	215000600	2
21	MACHINE SCREW	MFCX0832R	10

Revised Mar/2022

IM-0460-WC/WH

[CONTROL BOX]

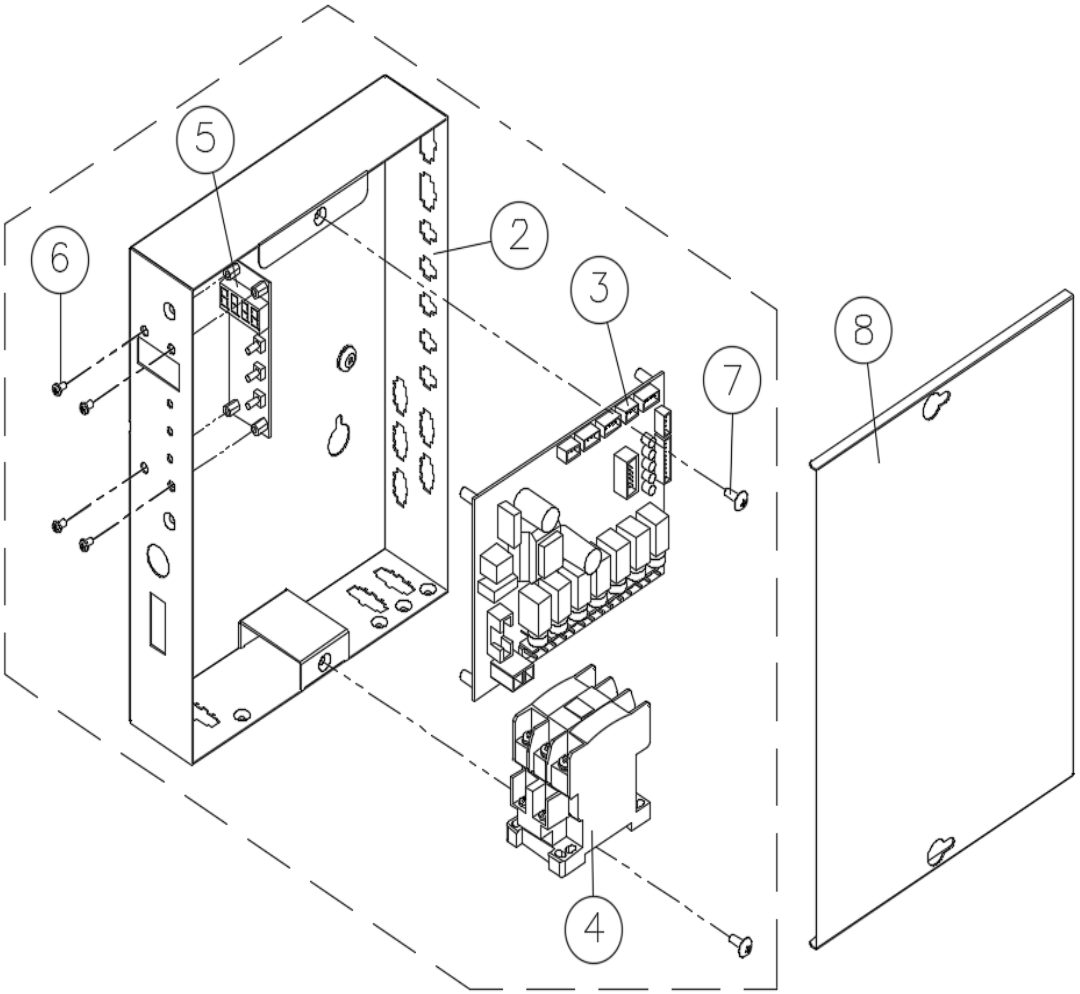

NO	ITEMS	CODE	Q'TY
2	CONTROL BOX	374143900	1
3	MAIN CIRCUIT BOARD	367013400	1
3-1	MAIN & FND PCB KIT_F90SEC (V1.2)	367013400F90	1
4	MAGNETIC CONTACTOR	322002200	1
5	FND CIRCUIT BOARD	367013100	1
6	MACHINE SCREW	MPCX0610L	4
7	MACHINE SCREW	MTCX0812R	2
8	CONTROL BOX COVER	374144300	1
NEW DESIGN (starting with serial number VA/ ~)			
3	MAIN CIRCUIT BOARD (FLOAT)	415011900	1
5	FND CIRCUIT BOARD (FLOAT)	415011800	1

Revised June/2022

IM-0460-WC/WH

[WATER IN/OUT PARTS]

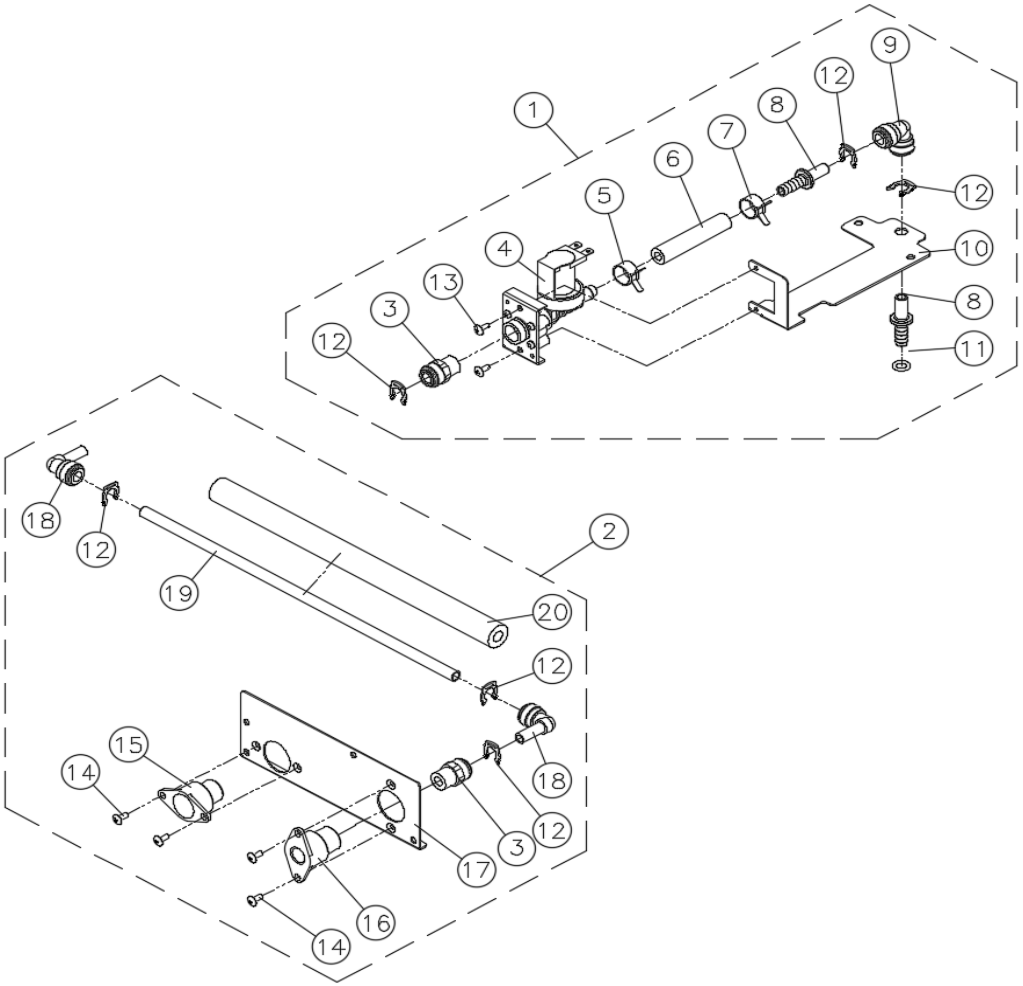

NO	ITEMS	CODE	Q'TY
1	WATER INLET VALVE ASSY	469003020	1
2	WATER INLET HOSE ASSY	469002810	1
3	STRAIGHT ADAPTOR (3/8")	398016500	2
4	WATER INLET VALVE	340027500	1
5	BAND SPRING 17	203003200	1
6	BRAIDED SILICONE HOSE	229027800	1
7	BAND SPRING 17	203003200	1
8	TUBE TO HOSE STEM	398014200	2
9	EQUAL ELBOW	398012000	1
10	SUPPORT WATER INLET VALVE	301173610	1
11	O-RING(AN110)	303036400	1
12	LOCKING CLIP 3/8"	224002000	5
13	MACHINE SCREW (M4x8)	MTCX0816R	2
14	MACHINE SCREW (M4x8)	MTCX0816R	4
15	DRAIN SOCKET (NPT 3/4" - ø20)	215013400	1
16	WATER INLET SOCKET (3/8" NPT)	215018700	1
17	WATER IN-OUT BRACKET	N/A	
18	STEM ELBOW	398013801	2
19	PE TUBE (OD 3/8")	229013500	1
20	PIPE INSULATION (ID 10, t5)	306009000	1

Revised Mar/2022

IM-0460-WC/WH

[EVAPORATOR PARTS]

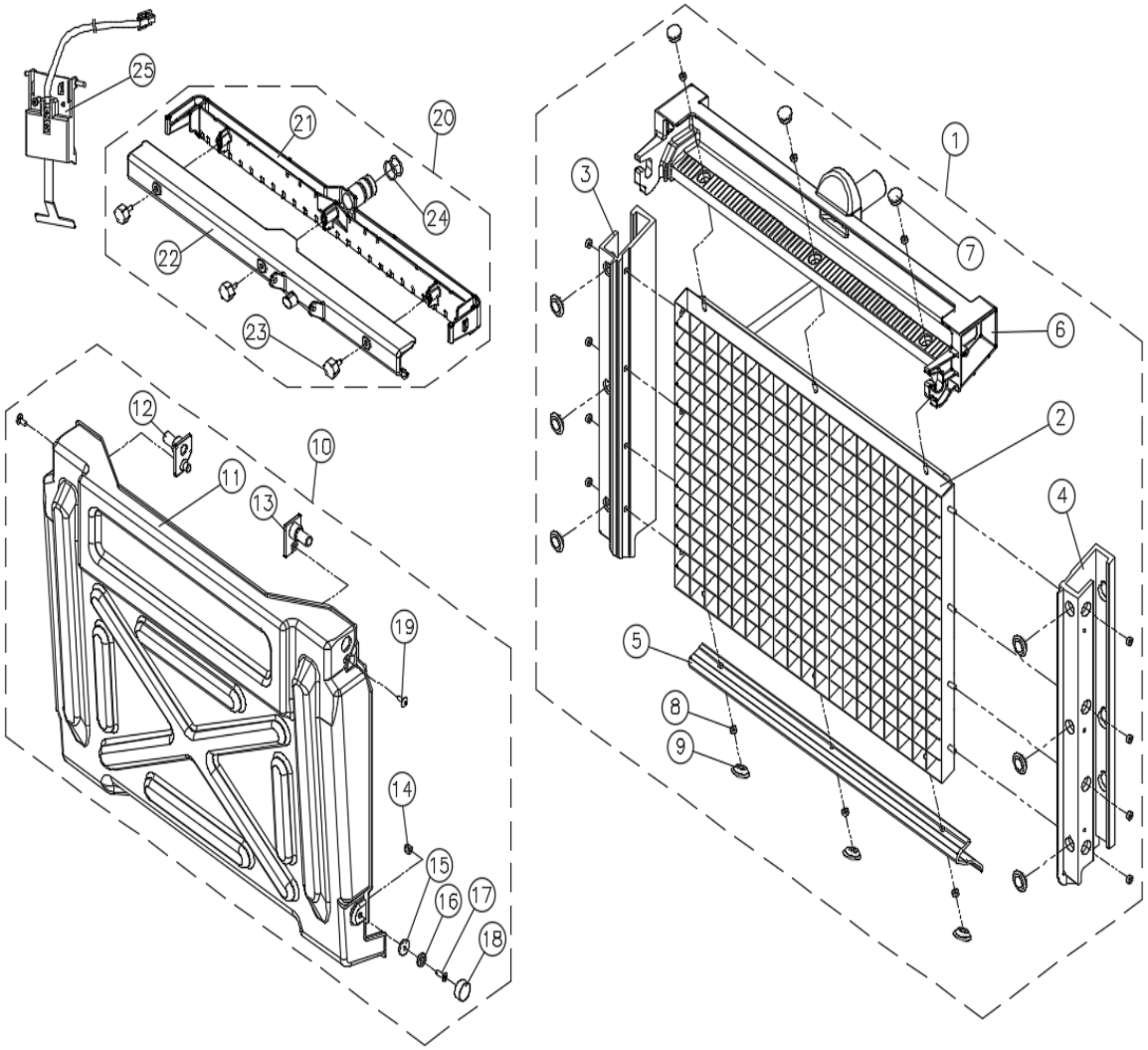

NO	ITEMS	CODE	Q'TY
1	EVAPORATOR COMPLETE ASSY-C	409040600	1
	EVAPORATOR COMPLETE ASSY-H	409040610	1
2	EVAPORATOR	N/A	
3	EVAPORATOR FRAME-L	N/A	
4	EVAPORATOR FRAME-R	N/A	
5	EVAPORATOR BOTTOM FRAME	N/A	
6	EVAPORATOR TOP FRAME	N/A	
7	EVAPORATOR TOP FRAME-CAP	N/A	
8	NUT HEX	N/A	
9	CAP SILICON	N/A	
10	WATER CURTAIN ASSY	482002700	1
11	WATER CURTAIN	N/A	
12	HANGER-L	N/A	
13	HANGER-R	N/A	
14	CAP NUT	N/A	
15	SPACE-MAGNET	N/A	
16	MAGNET(Φ12xT3)	N/A	
17	MACHINE SCREW	N/A	
18	CAP MAGNET	N/A	
19	TAPPING SCREW	N/A	
20	WATER DISTRIBUTOR ASSY	466004000	1
21	WATER DISTRIBUTOR-BODY	N/A	
22	WATER DISTRIBUTOR-COVER	N/A	
23	THUMB SCREW	210804501	3
24	O-RING	303036300	2
25	ICE THICKNESS PROBE ASSY	701003100	1

Revised NOV/2022

IM-0460-WC/WH

[WATER TROUGH PARTS]

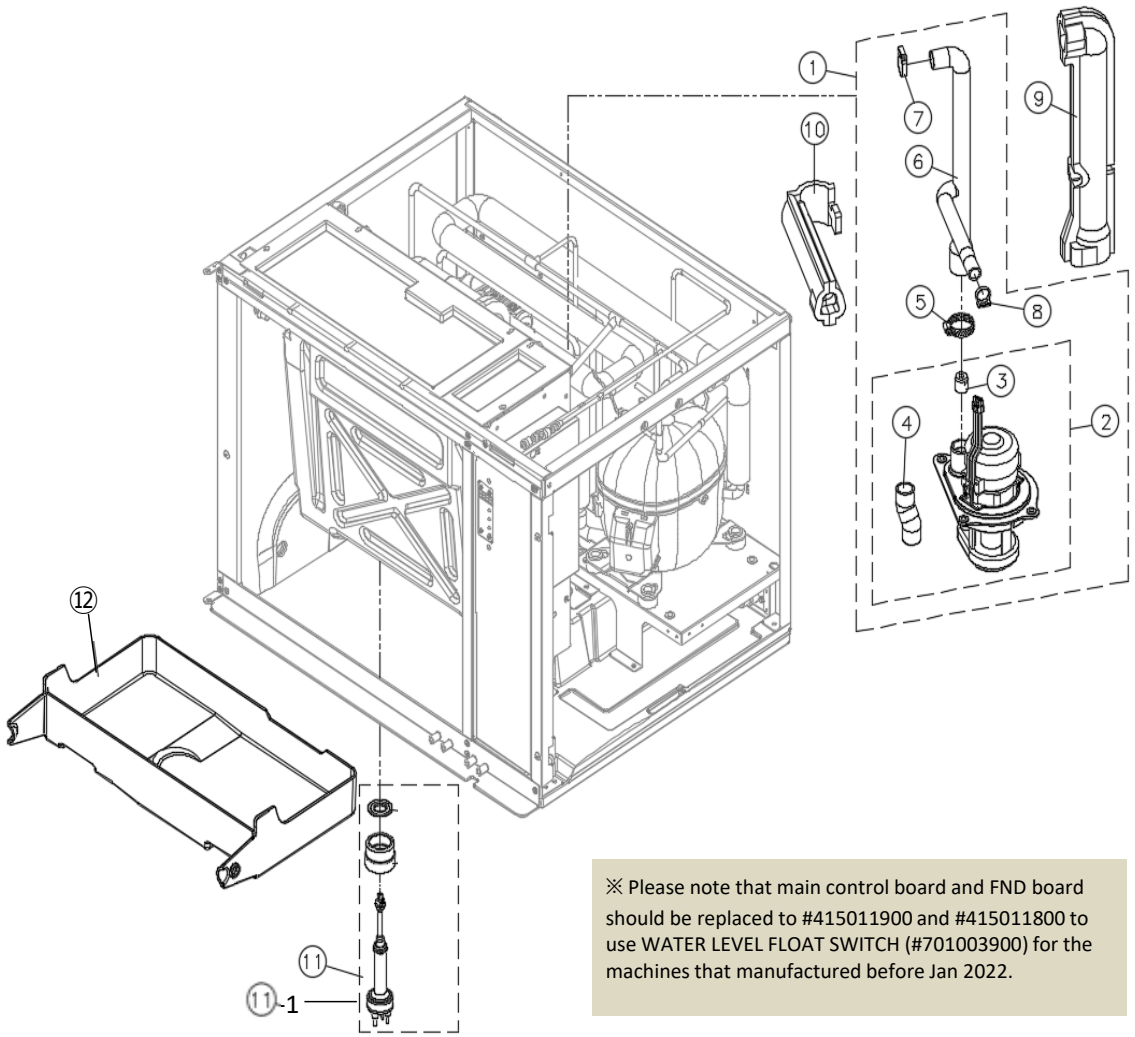

※ Please note that main control board and FND board should be replaced to #415011900 and #415011800 to use WATER LEVEL FLOAT SWITCH (#701003900) for the machines that manufactured before Jan 2022.

NO	ITEMS	CODE	Q'TY
1	WATER PUMP COMPLETE ASSY	#2~8	1
2	PUMP MOTOR	406025020	1
3	PACKING ORIFFICE (Φ9)	N/A	
4	CONNECTING HOSE	N/A	
5	BAND HOSE 40	203001400	1
6	PVC PIPE	229032000	1
7	CLAMP, HOSE	229026600	1
8	BAND SPRING 21	203003300	1
9	INSULATION PUMP TO DISTRIBUTOR	306042000	1
10	INSULATION PUMP TO DRAIN	306042100	1
11	WATER LEVEL PROBE ASSY (NEW)	701003211	1
12	WATER TROUGH	339013400	1
NEW DESIGN (starting with serial number VA/ ~)			
11-1	WATER LEVEL FLOAT SWITCH	701003900	1

Revised Mar/2022

IM-0460-WC/WH

[FRAME PARTS]

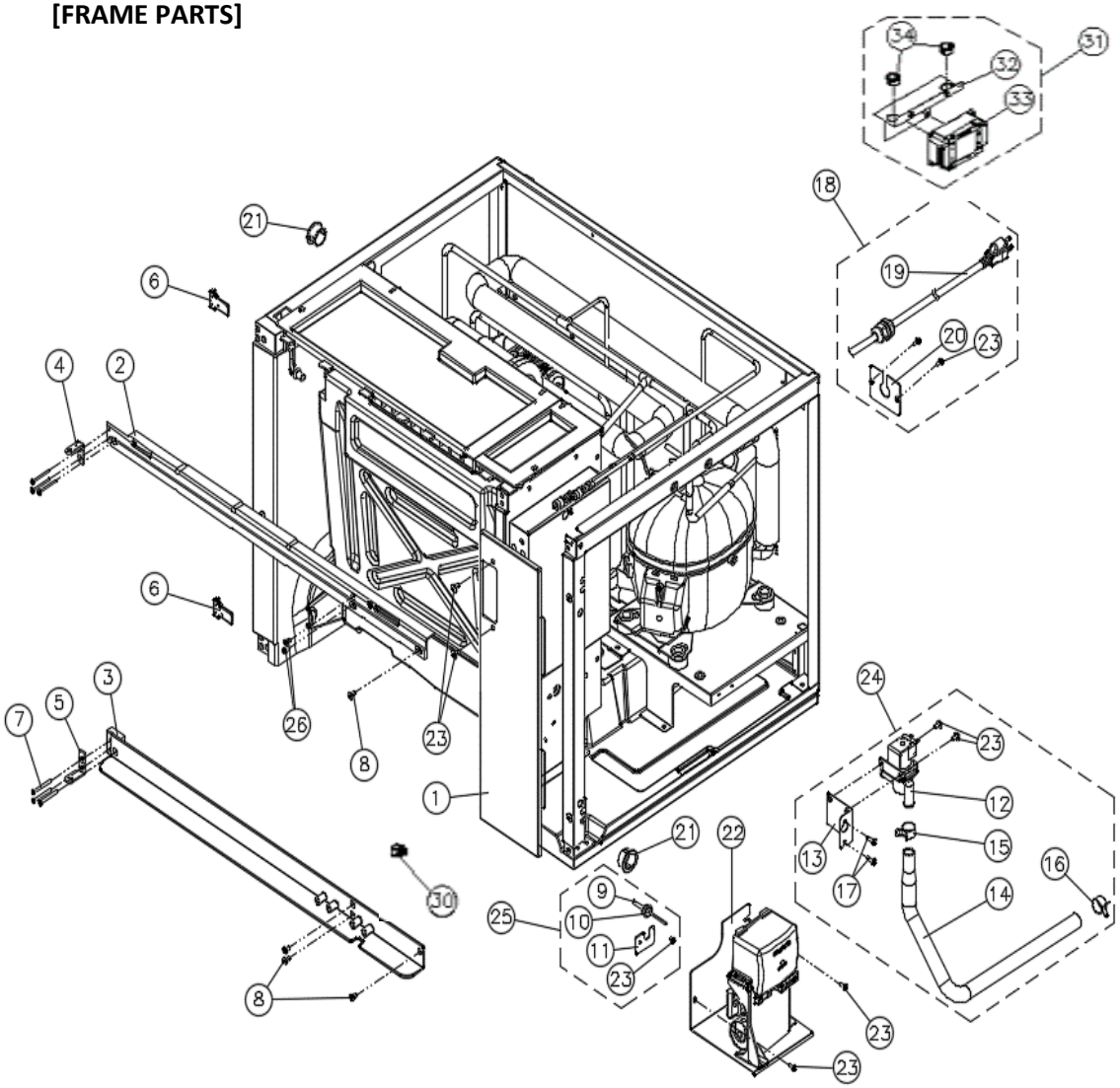

NO	ITEMS	CODE	Q'TY
1	FRONT COVER	317210400	1
2	FRONT TOP SUPPORT	341012401	1
3	FRONT LOWER SUPPORT	341012501	1
4	HINGE BRACKET	321005110	1
5	HINGE BRACKET DOWN	321005210	1
6	HINGE SUPPORT	341012300	2
7	TAPPING SCREW	TFCQ0841R	6
8	MACHINE SCREW	MFCX1022R	4
9	CURTAIN SENSOR	701002000	1
10	SENSOR CAP	319009300	1
11	COVER BRACKET	301169400	1
12	DUMP VALVE	340026600	1
13	BRACKET, DUMP VALVE	301169600	1
14	PVC PIPE	229032100	1
15	BAND SPRING 20	203004200	1
16	BAND SPRING 21	203003300	1
17	TAPPING SCREW	TTCQ0826R	2
18	BKT & POWER CORD ASSY	722012440	1
19	POWER CORD	722012700	1
20	BRACKET POWER CORD	301096700	1
21	GROMMET BUSHING	232003500	2
22	BRACKET	301171201	1
23	MACHINE SCREW	MTCX0816R	9
24	DRAIN VALVE COMPLETE ASSY	#12~17,23	1
25	SENSOR PARTS COMPLETE	701003300	1
26	MACHINE SCREW	MFCX1025R	2
NEW DESIGN (starting with serial number VA/ ~)			
30	POWER SWITCH	355025100	1
31	NOISE FILTER ASSY	7220143B0	1
32	NOISE FILTER BRACKET	301171111	1
33	NOISE FILTER	500000900	1
34	BUSHING	232003600	1

Revised Mar/2022

IM-0460-WC/WH

[REFRIGERATION PARTS]

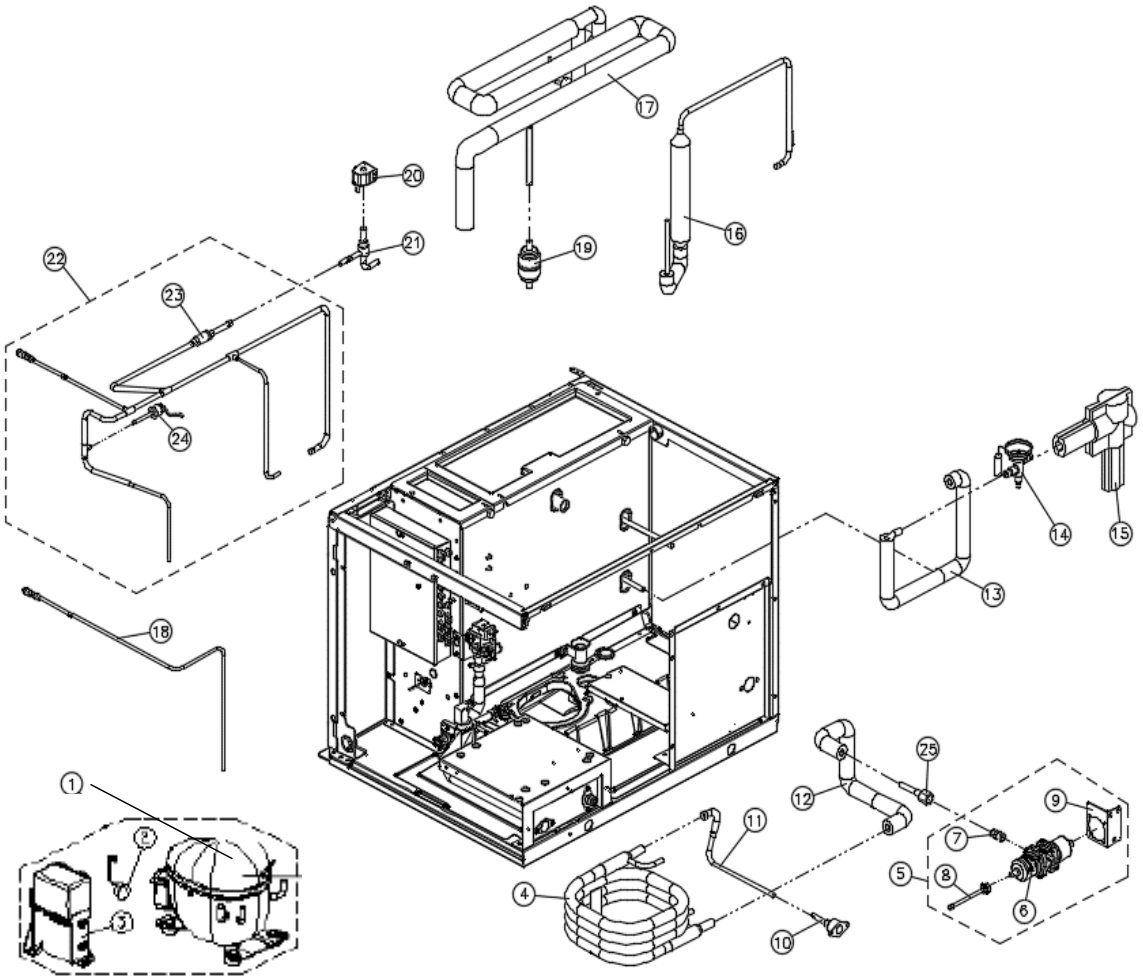

NO	ITEMS	CODE	Q'TY
1	COMPRESSOR	394018500	1
2	OLP	658007000	1
3	STARTER KIT	426054300	1
4	CONDENSER	411016400	1
5	WATER ADJUST VALVE ASSY	#6~9	1
6	WATER ADJUST VALVE	340031200	1
7	WATER FLARE BOLT	214010600	1
8	SOLDER ADAPTOR	215018500	1
9	BRACKET	301187700	1
10	SOCKET (3/4",NPT)	215015510	1
11	CONDENSER PIPE_OUT	325140220	1
12	CONDENSER PIPE_IN	325140320	1
13	HOT GAS PIPE ASSY	325140401	1
14	EXPANSION VALVE	340007400	1
15	FOAM INDULATION, TXV	306016700	1
16	LIQUID RECEIVER PIPE & DRYER	325140601	1
17	HEAT EXCHANGE PIPE	325150400	1
18	CHARGE SCHRAEDER VALVE	325146800	1
19	FILTER DRYER	372001300	1
20	SOLENOID VALVE COIL	429008100	1
21	SOLENOID VALVE	340028200	1
22	DISCHARGE PIPE ASSY	325150320	1
23	STRAINER HOT GAS	605001900	1
24	HIGH PRESSURE CUT OUT	429003900	1
25	FLARE SLEEVE ASSY	407024800	1