IB-033/044

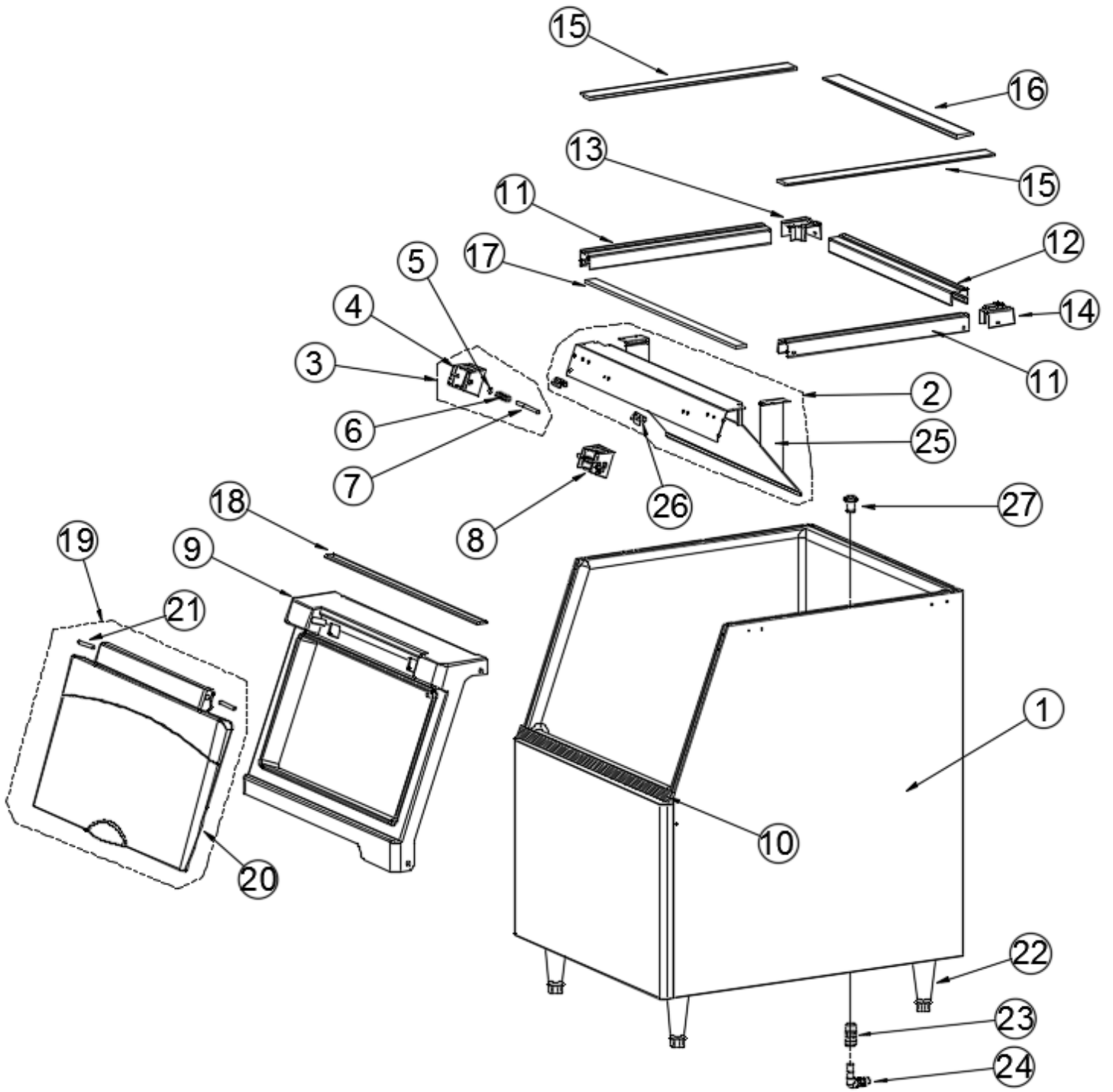

NO	ITEMS	CODE
1	BIN CASE ASS'Y(IB-033)	467018920
	BIN CASE ASS'Y(IB-044)	467018930
2	ICE GUIDE ASS'Y	427058510
3	HINGE L ASS'Y	421000300
4	HINGE L	321006000
5	E-RING	213001000
6	HINGE SPRING	323007300
7	HINGE SHAFT	314039802
8	HINGE R ASS'Y	421000400
9	DOOR FRAME	391015500
10	FOAM PE (DOOR FRAME)	306041200
11	TOP FRAME L/R (22)	339012910
12	TOP FRAME BACK	339012930
13	TOP FRAME CORNER L	339013000
14	TOP FRAME CORNER R	339013100
15	EPDM 22 LR	306039400
16	EPDM 30 BACK	306039700
17	EPDM 30 FRONT	306039800
18	EPDM 30 FRONT	306039800
19	DOOR ASS'Y	447012710
20	DOOR SUB ASS'Y	447012810
21	DOOR HINGE	321006200
22	FOOT EXPORT	302006800
23	STRAIGHT ADAPTOR	398014800
24	DRAIN ELBOW	398014900
25	ICE GUIDE	317181200
26	LOCKING PLATE DOOR	301173500
27	DRAIN CAP	319008310